Reference Configuration Overview

- Introduction
- Reference Configuration Views
- Instrument Module Features
- Spacecraft Bus Features
- Launch Vehicle and Orbit
- Resource Summaries
- Documentation and Future Plans

Govind Gadwal
October 14, 1999

Introduction

- **Reference configuration developed for demonstration of feasibility, establishment of technology requirements and development of cost estimates**

- **Four satellites in mission; launched two at a time on an Atlas V or Delta IV**

- **Each satellite has:**
  - One Spectroscopy X-ray Telescope (SXT) with a 1.6 meter optic
  - Three Hard X-ray Telescopes (HXT) with 0.4 meter optics
  - One Extendible Optical Bench provides 10.0 meter focal length for SXT and HXT and retracts to accommodate dual launch
  - One Calorimeter Detector Assembly at SXT focus cooled by Turbo-Brayton Cryo Cooler with ADR to 50 mK
  - One Gratings Assembly, aft of SXT Optic, disperses x-rays onto an array of eight CCD's located on Rowland Circle
  - One CdZnTe Detector Assembly for each HXT
  - Separable spacecraft bus and instrument modules

Reference Configuration

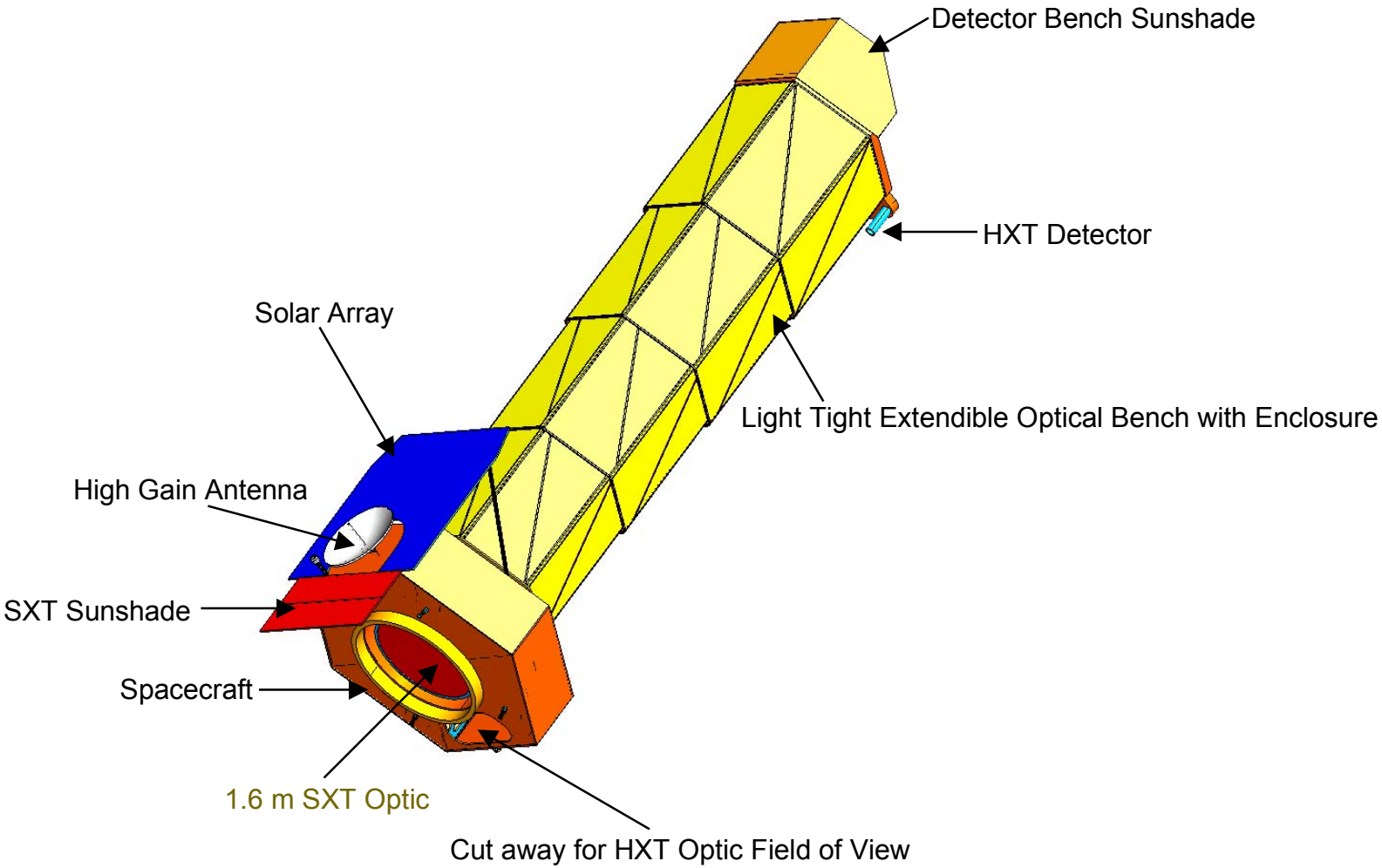

Reference Configuration
View from Detector End

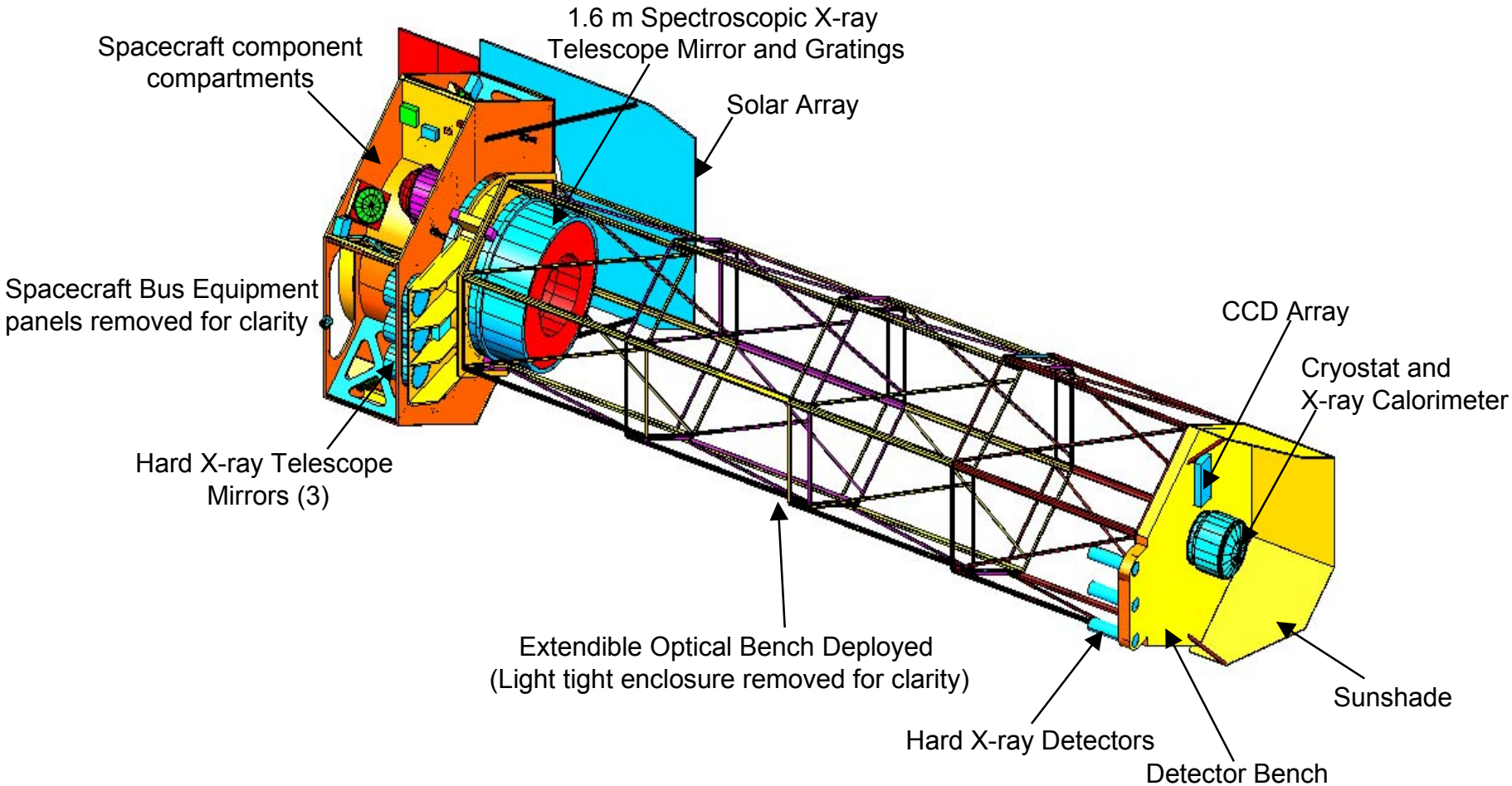

Reference Configuration
View from Optics End

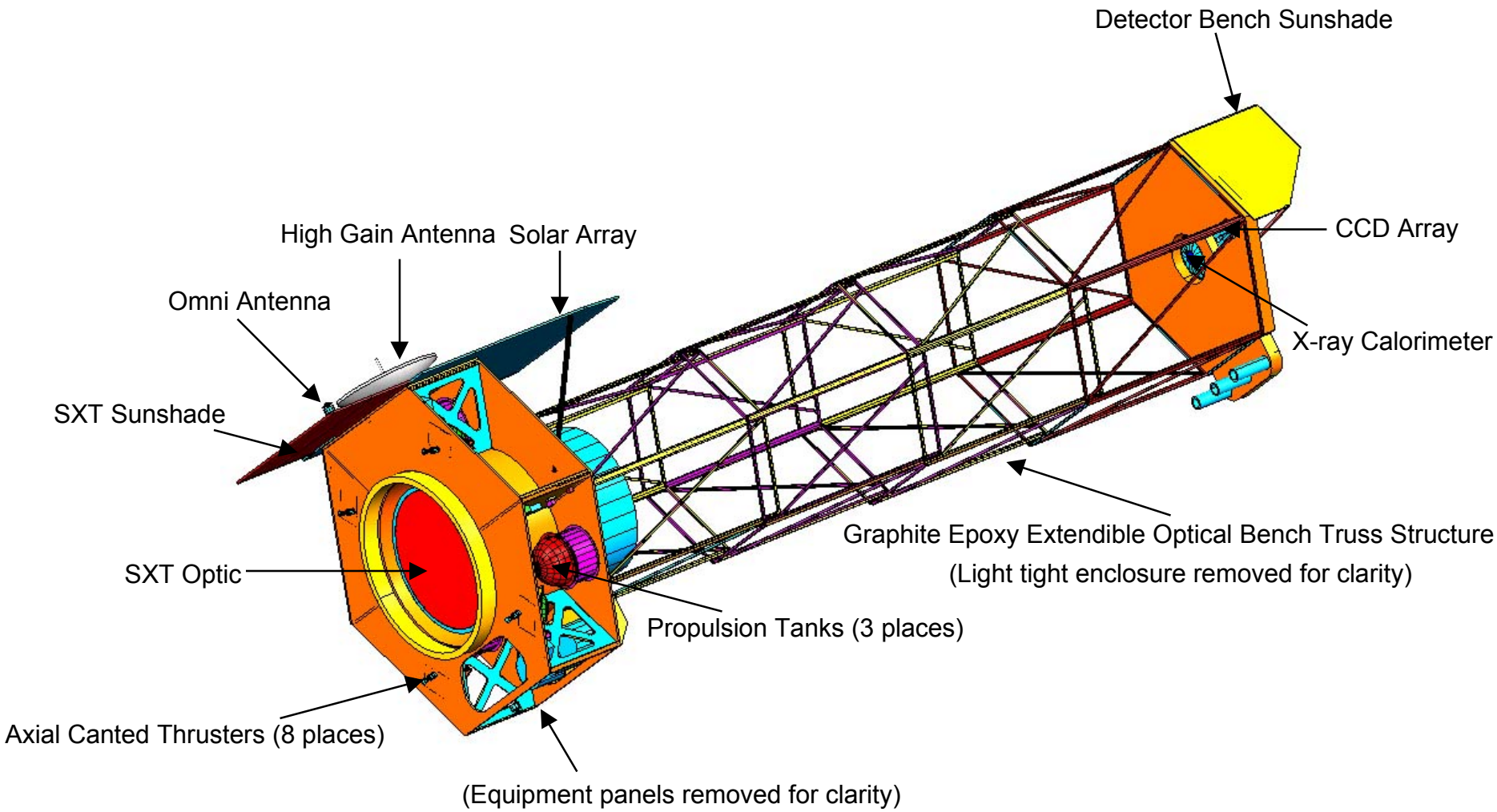

Instrument Module Features

- **The Optical Assembly and the Detector Assembly are configured respectively at warm and cold ends of the satellite for thermal compatibility**
- **Extendible Optical Bench**
  - Constructed from low Coefficient of Thermal Expansion (CTE) composite metering trusses
  - Provides deployable optics with a focal length of 10.0 meters
- **Kinematic mounts are provided to allow stress free deployment and thermal expansion**
- **Cooling for X-ray Calorimeter**
  - Adiabatic Demagnetizing Refrigerator (ADR) provides cooling power of 10 micro watts of 50 mK to detector
  - Turbo-Brayton Cooler provides cooling power of 5 to 100 milli watts at 6 to 10 K to ADR
  - The Detector and Cryo-Subsystem are enclosed in a dewar for thermal isolation from the spacecraft environment

Exploded View (Top/Side) - Instrument Module

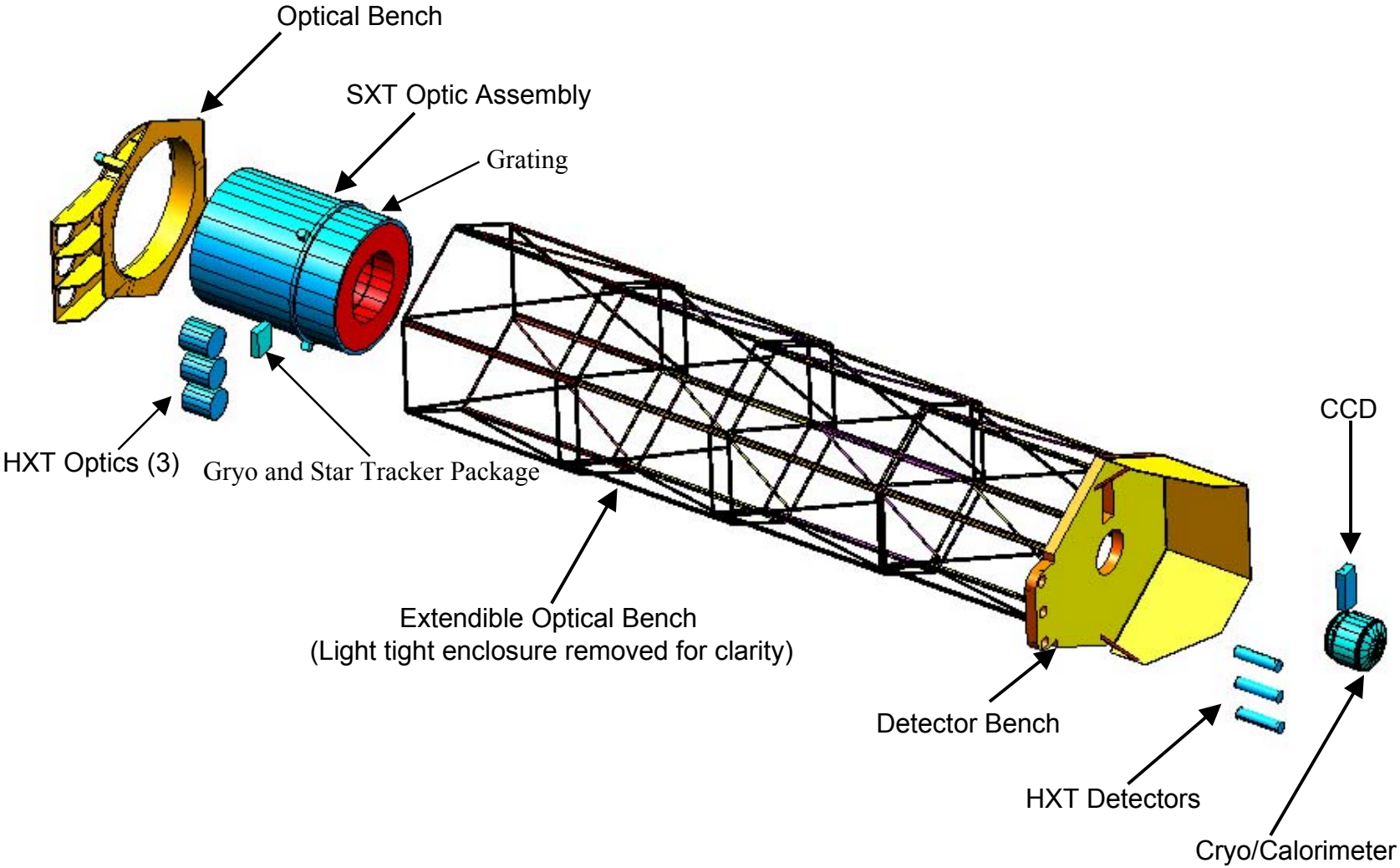

Spacecraft Bus Features

- **Expect use of standard spacecraft bus architecture and components**
  - Showcased in Rapid Spacecraft Development Contract
- **Communication Subsystem**
  - S-Band Transponder, Amplifier and Omni Antenna for Commands and Housekeeping Telemetry
  - X-Band Transmitter and pointed High Gain Antenna for science data dumps
- **Command and Data Handling Subsystem**
  - Performs command handling and telemetry collection functions
  - Synchronizes and provides the Universal Coordinated Time to accuracy of ± TBD seconds to the instruments
  - Stores approximately 10 Gbits of data (2 days) on board the computer
- **Attitude Control Subsystem**
  - 3-Axis stabilized inertial pointing with star tracker and inertial reference units as sensors and reaction wheels as actuators
  - Momentum dumping uses propulsion subsystem
  - Pointing stability ≤1.2 arc sec per 2 seconds in pitch and yaw

Spacecraft Bus Features (cont.)

- **Attitude Control Subsystem (Cont.)**
  - Pointing jitter ≤ 2 arc sec in pitch and yaw
  - Pointing jitter ≤ 5 arc sec in roll
  - Slew time between targets: 1 hour max.
  - Roll and pitch pointing range of ± 20 degrees max. from normal to sunline
- **Propulsion subsystem uses mono-propellant hydrazine in blow down mode**
  - Eight canted thrusters for fuel efficiency with a specific impulse of 220 sec
  - Three propulsion tanks store 180 Kgs of propellant load to deliver 177m/s of ΔV
- **Electrical Power Subsystem**
  - Ga As Solar Array has End of Life load capability of 1100 Watts
  - NiH battery has maximum storage capacity of 20 AH
  - Power Supply Electronics provides 24 to 34 V of bus voltage

Reference Configuration
View of Spacecraft Bus Components

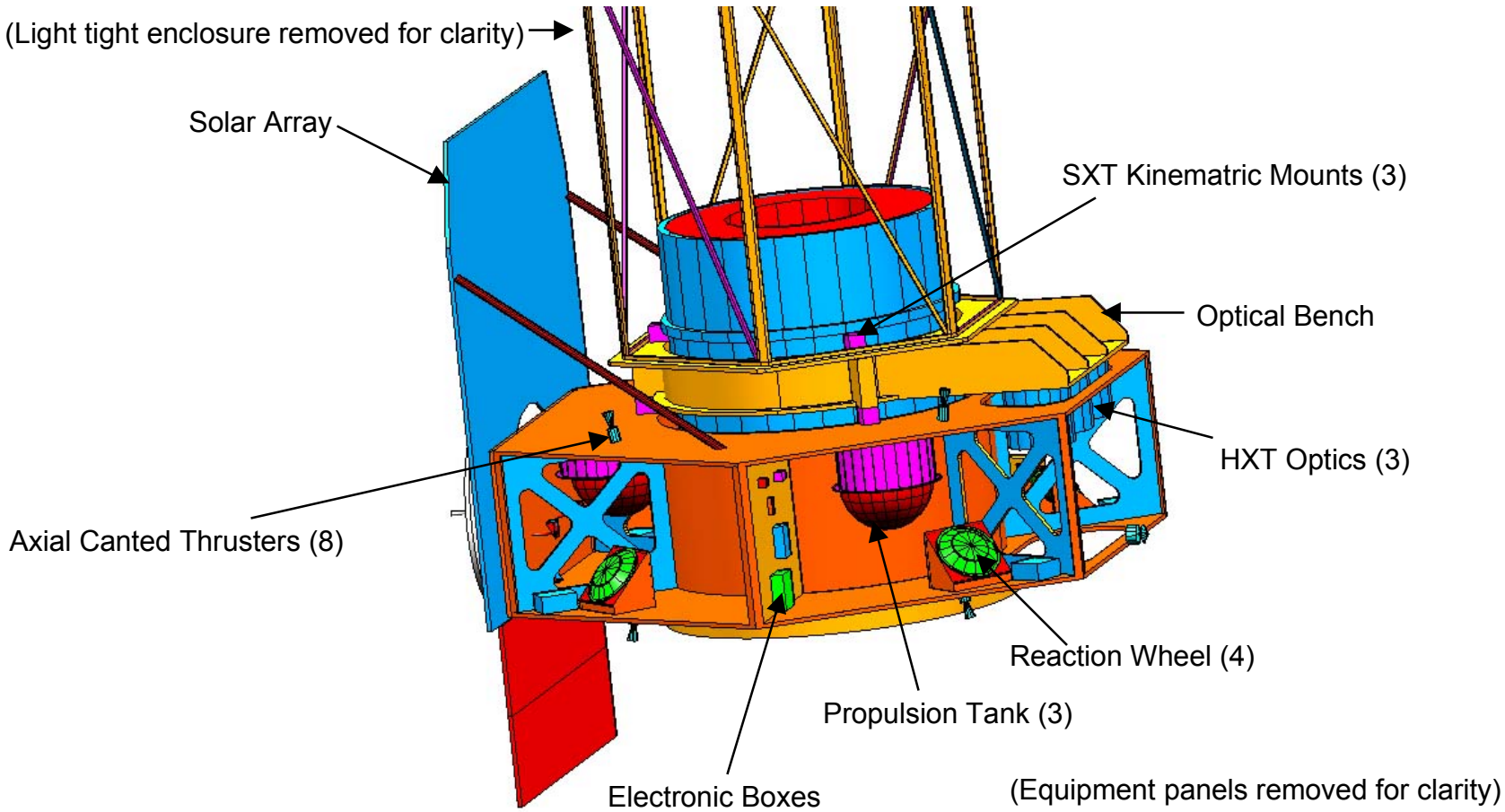

Reference Configuration View of Spacecraft Bus Components and HXT Optics

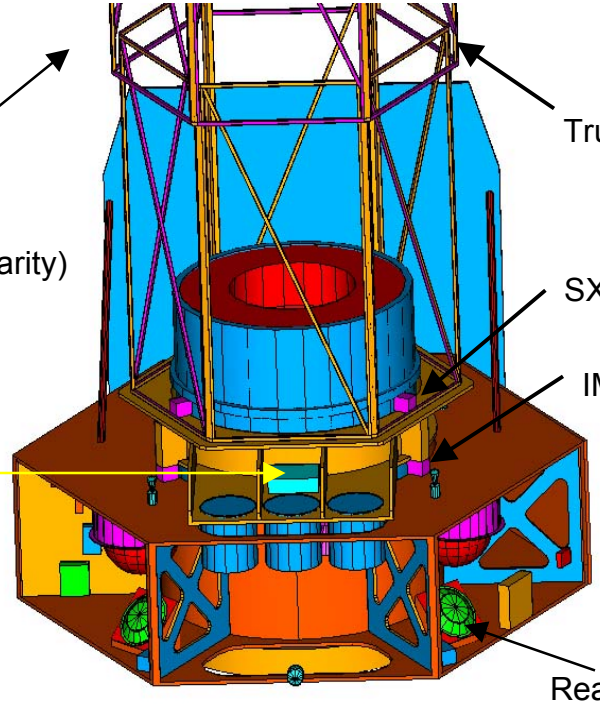

Launch Vehicle and Orbit

- **Atlas V-551 to insert two Constellation-X satellites into the lunar swingby orbit**
  - 5 meter diameter, 87 feet long extended payload fairing
  - 5 solid strap on Booster Rockets
  - 1 heavy common core booster rocket and RD-180 engine
  - Estimated insertion capability of 6500 Kgs. at C3=-2.6
  - Available in December 2002

- **Satellite propulsion system used to attain L2 halo orbit**

Launch Configuration

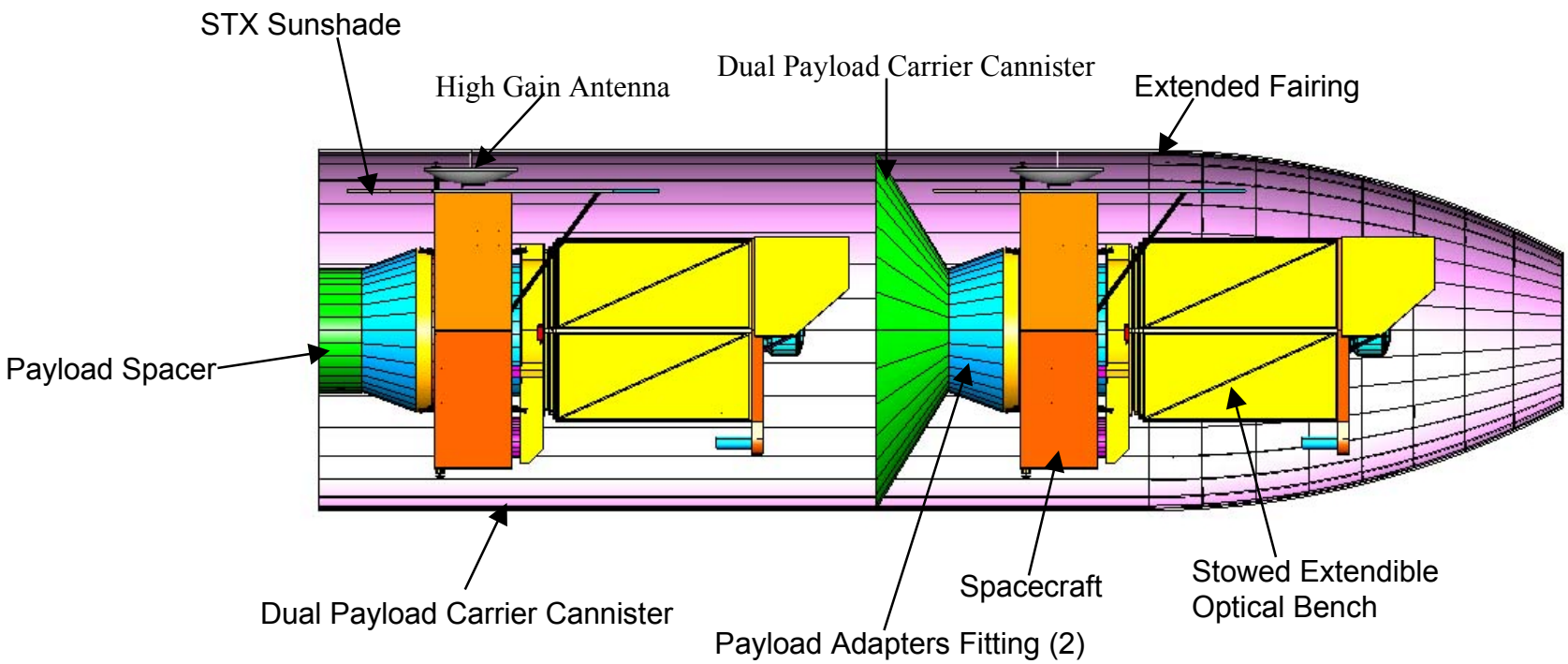

Atlas V Dual Manifest Launch Configuration - Side View

Launch Configuration (cont.)

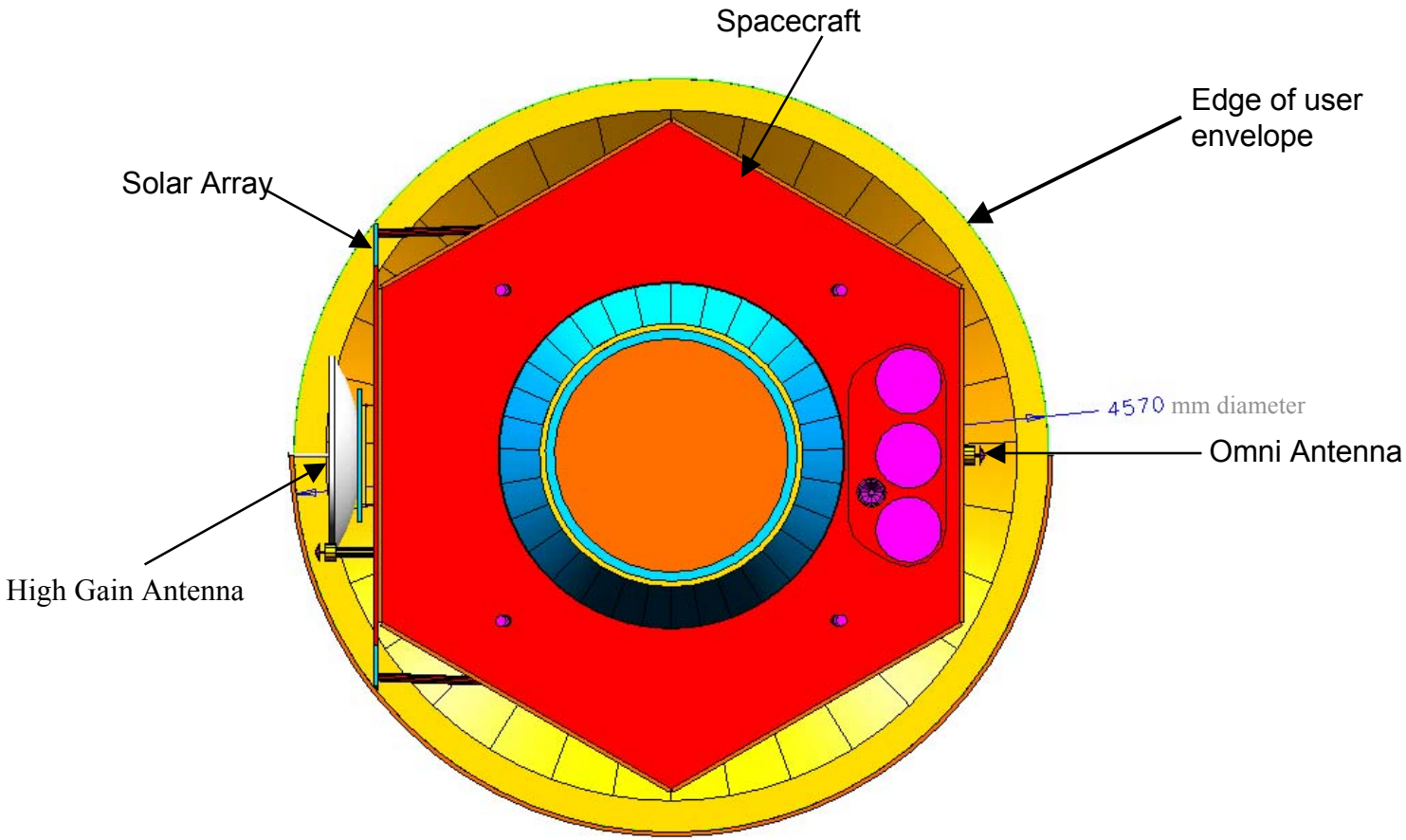

Atlas V DM Launch Configuration - Bottom View

Resource Summaries

- **Mass Estimate**

Item	Satellite Mass (Kg)	Launch Mass (Kg)
Instrument Module	1459	2918
Wet Spacecraft Bus	761	1522
Dual Manifest Hardware	1500	1500
Margin		560
Total Launch Mass		6500
Estimated Atlas V-551		
Launch Capability C3=-2.6		6500 Kgs

- **Power Estimate Per Satellite**

Average Satellite Power Requirement	814 Watts
End of Life Power Capability	1100 Watts

- **Telemetry Estimate per Satellite**

S-Band Telemetry (Housekeeping Data)	2 Kbps
X-Band Telemetry (Science Data)	1.7 Mbps
Telemetry Down Link Time Approximately	1 hour/day

Mass Estimate of Instrument Module

Item	Mass (Kg)
Mirror 1.6 m	750
Grating CCD	48
HXT Optics 0.4 m	165
HXT Detectors	81
Calorimeter	33
Cryo System	90
EOB	292
TOTAL	1459

Mass Estimate of Spacecraft Bus

Item	Mass (Kg)
Structure	175
Mechanisms	7
Power	109
Thermal	17
Propulsion Hrdwr	35
Attitude Cntr Hrdwr	73
C&DH	7
Communications	38
Integration Mtrls	120
Propellent, etc.	180
TOTAL	761

Documentation and Future Plans

- **Reference Mission Description Document**
  - Completed and being reviewed in Project Office and will be available on Web for information and discussions

- **Ongoing work and Future Plans**
  - Thermal analyses of reference configuration is in progress
    - Verifies performance of thermal systems for SXT Mirror Assembly, Gratings, Optical Bench and Detector Bench
  - Structural analyses of the Instrument Module is Initiated.
    - On-orbit requirements of adjustment/alignment mechanisms will be evaluated
  - Evaluate flow down and impact of top level requirements
    - Universal Coordinated Time(UTC) requirements
    - Initiate assessment of accommodation of extended fairing on medium class vehicle with launch vehicle provider